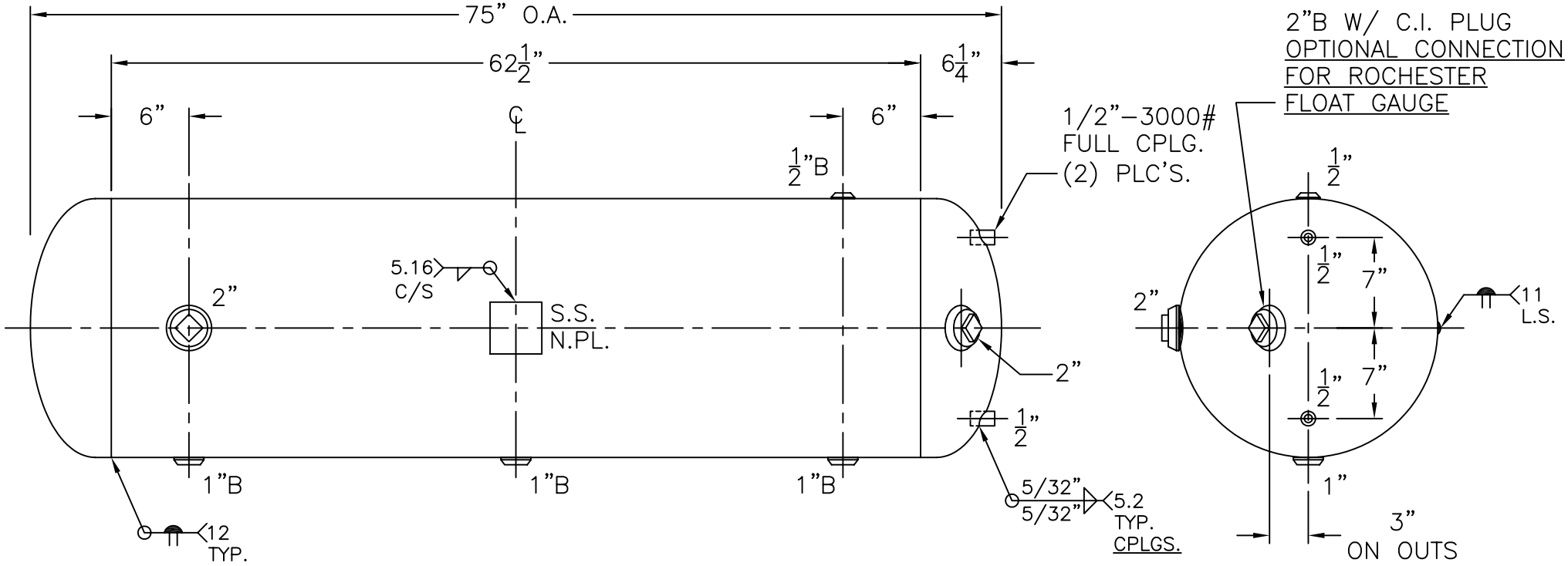

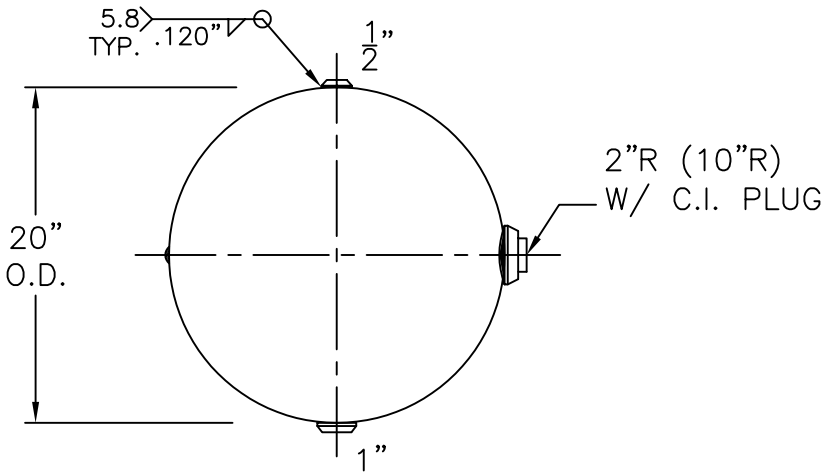

NOTE: 1) HYDRO @ 195 PSIG. MIN.

SHELL / HEADS	.136" SA-414-G 2:1 S.E.	X-100	REV. 2-7-14
	JOGGLE		DATE: 10-8-68
		FOR: HANSON STANDARD	
		HORIZ. EXPANSION TANK	
	.149" SA-414-G	SURFACE AREA = 34.4 SQ. FT.	
		INSIDE: UNPAINTED	
		(GALVANIZING OPTIONAL)	
M.A.W.P. 150 PSIG. @ 347 °F			
M.D.M.T. 0 °F @ 150 PSIG.		OUTSIDE: PRIME	
ASME. SECTION VIII DIV. 1, 2013			
X-RAY: RT-NO		BY: E.S.	SCALE: 1"-12"
GALLONS: 100	WT. 221 LBS.	ROY E. HANSON JR. MFG.	
SERIAL NO.		1600 E. WASHINGTON BLVD. LOS ANGELES, CA 90021	
N.B.			