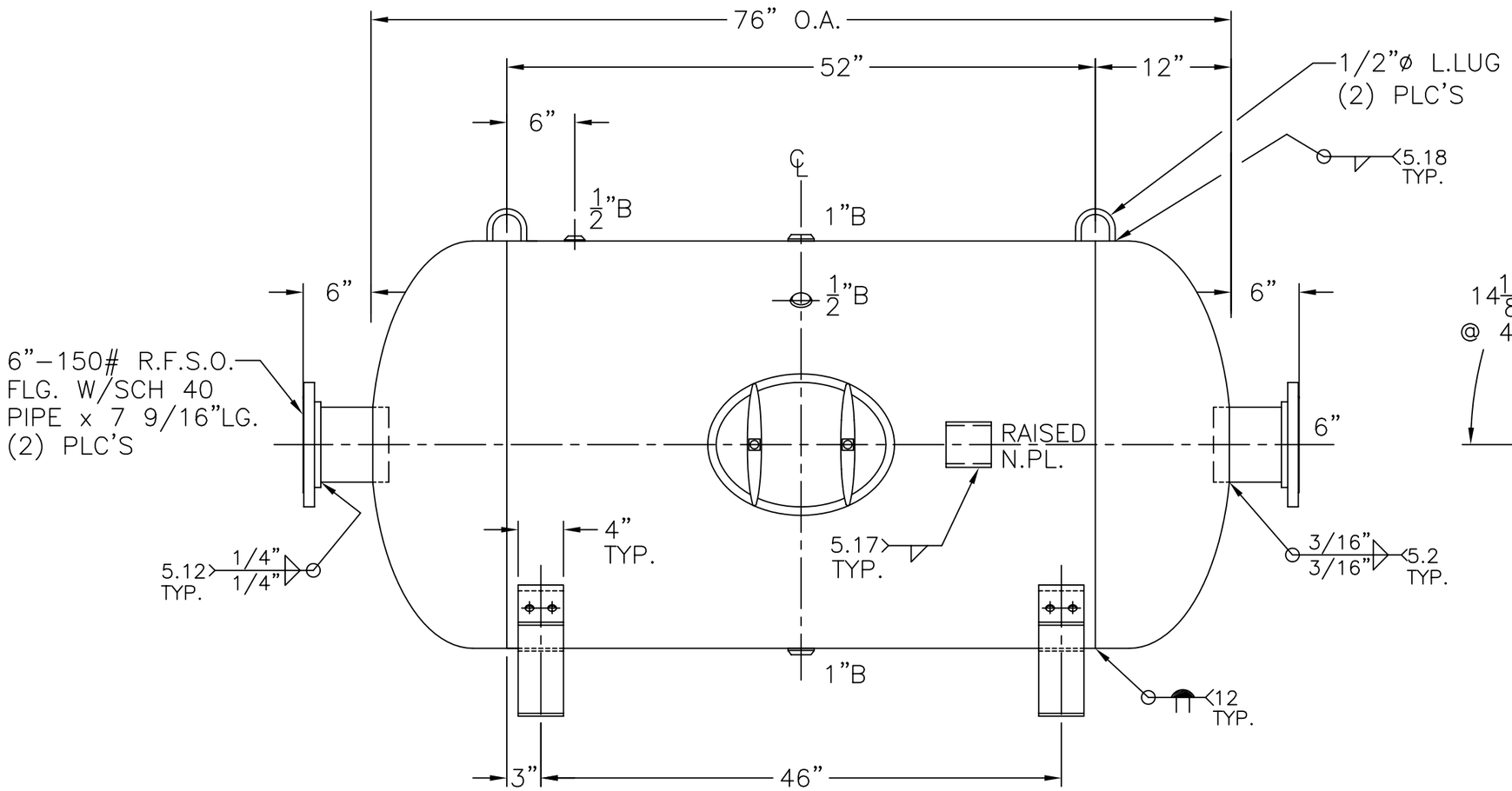

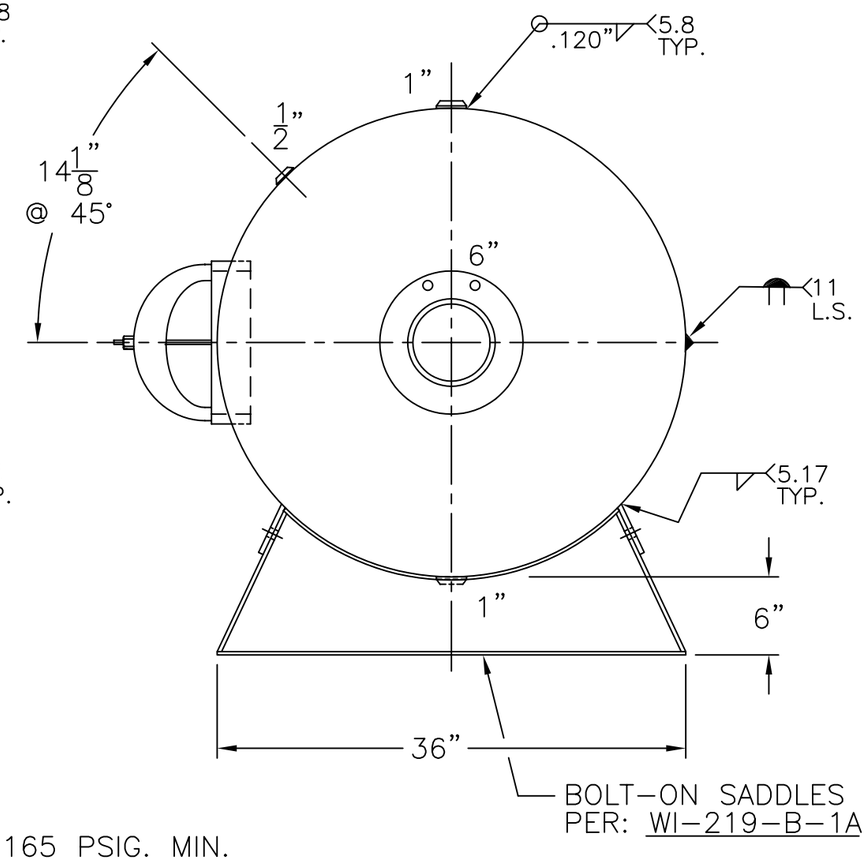

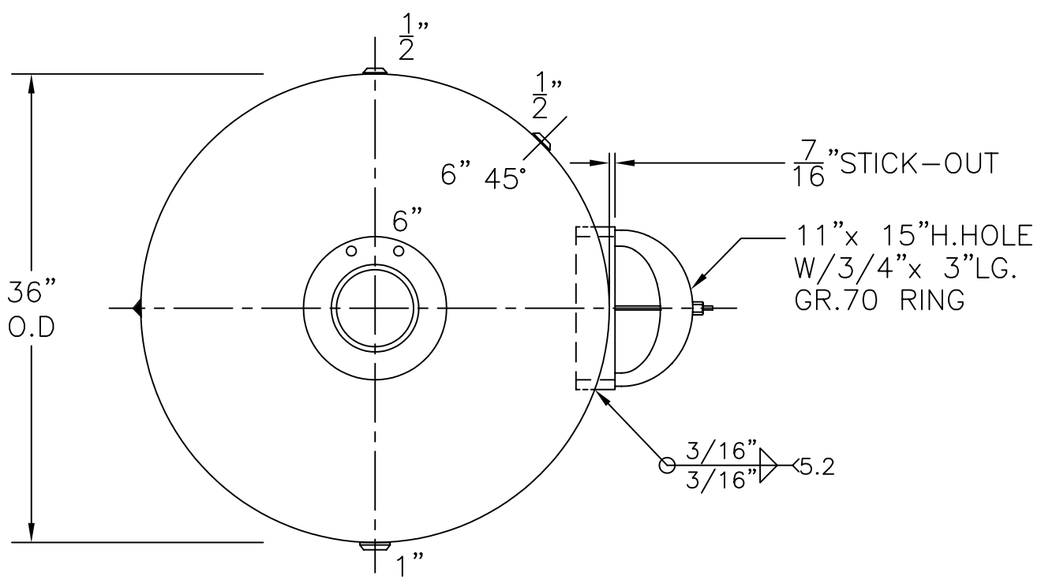

VIEW W/OUT SUPT.

NOTE: 1) HYDRO @ 165 PSIG. MIN.

SHELL / HEADS	.182" SA-455 2:1 S.E.	WL-631-B	REV. 6-14-07
	JOGGLE - .149 OFFSET		DATE: 8-22-06
		FOR: -	
		HORIZ. CHILLED WATER TANK	
	.165" SA-414-G	SURFACE AREA = 64.3 SQ. FT.	
		INSIDE: EPOXY LINED	
M.A.W.P. 125 PSIG. @ 180 °F			
M.D.M.T. 0 °F @ 125 PSIG.		OUTSIDE: SAND BLAST	
ASME. SECTION VIII DIV. 1, 2004 ADD 2005		-	
X-RAY: RT-NO		BY: J.G./ C.J.	SCALE: 1"=12"
GALLONS: 300	WT. 702 LBS.	ROY E. HANSON JR. MFG.	
SERIAL NO.		1600 E. WASHINGTON BLVD.	
N.B.		LOS ANGELES, CA 90021	