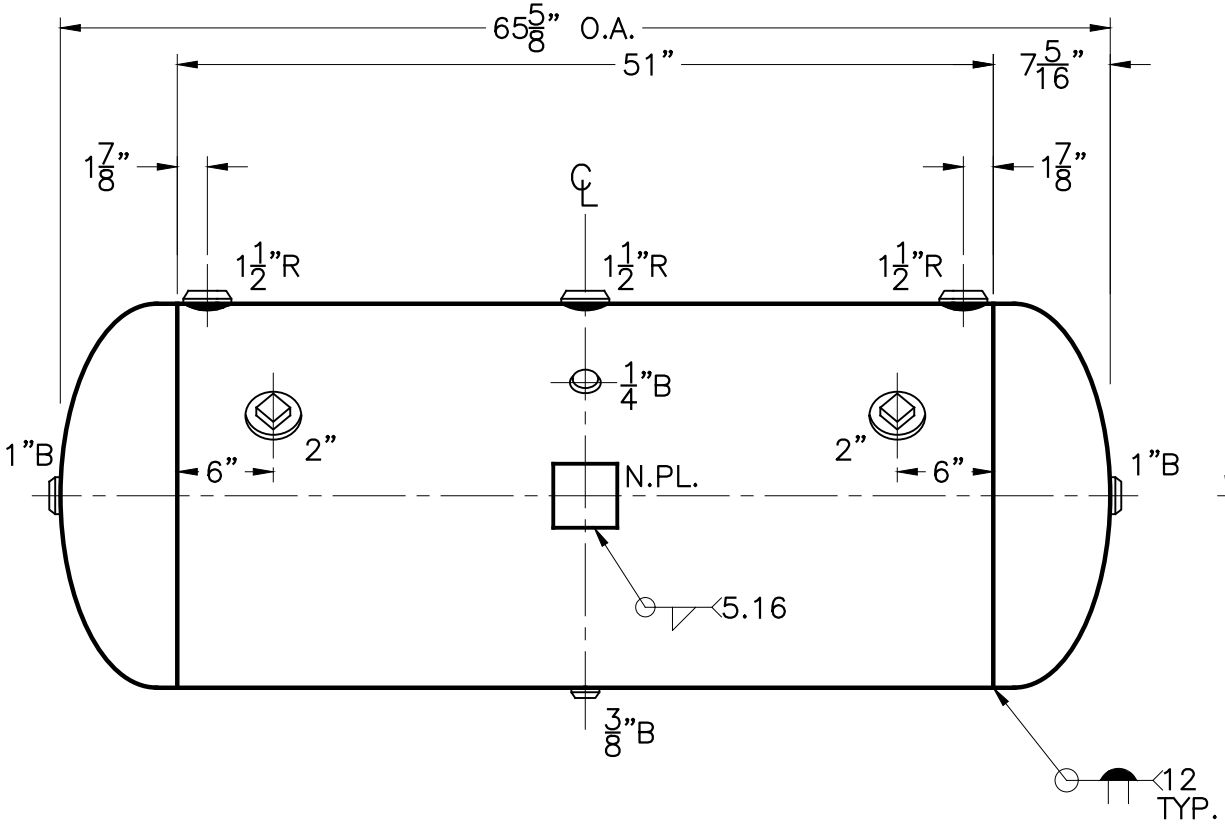

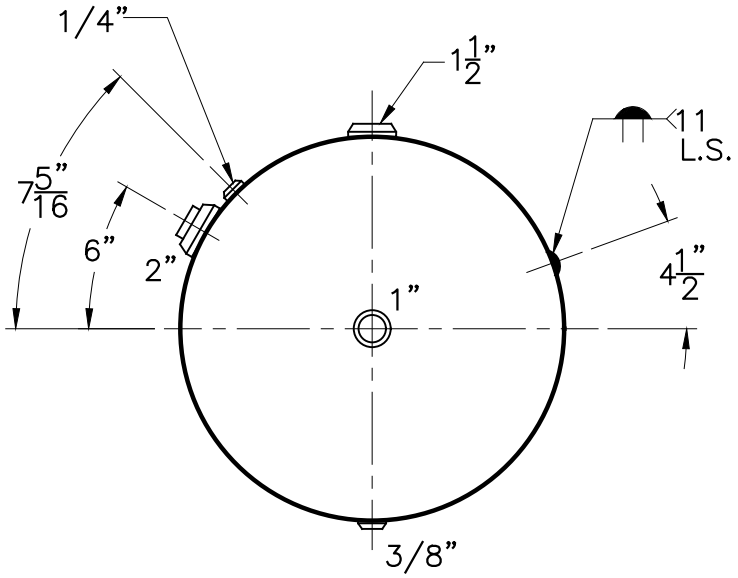

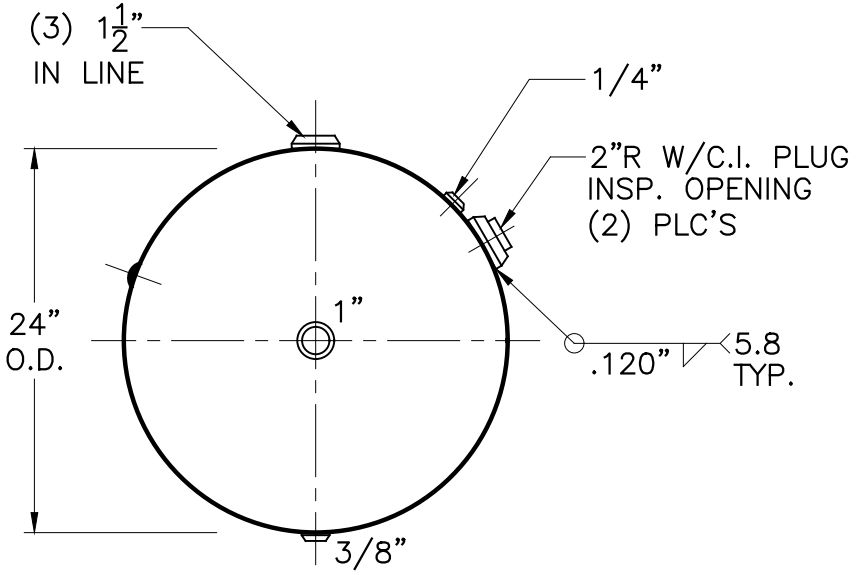

NOTE: 1) HYDRO @ 327 PSIG. MIN.

SHELL / HEADS	.164" SA-414-G 2:1 S.E.	HC-120-ABS	REV. 4-6-07
	JOGGLE		DATE: 2-27-06
		FOR: HANSON STANDARD	
		HORIZ. AIR TANK	
	.200" SA-455	ABS APPROVAL 2-27-06	
		INSIDE: UNPAINTED	
M.A.W.P. 250 PSIG. @ 400 °F			
M.D.M.T. -20 °F @ 250 PSIG.		OUTSIDE: PRIME	
ASME. SECTION VIII DIV. 1, 2004 ADD 2006			
X-RAY: RT-NO		BY: J.G.	SCALE: 1"=12"
GALLONS: 120	WT. 314 LBS.	ROY E. HANSON JR. MFG.	
SERIAL NO.		1600 E. WASHINGTON BLVD.	
N.B.		LOS ANGELES, CA 90021	