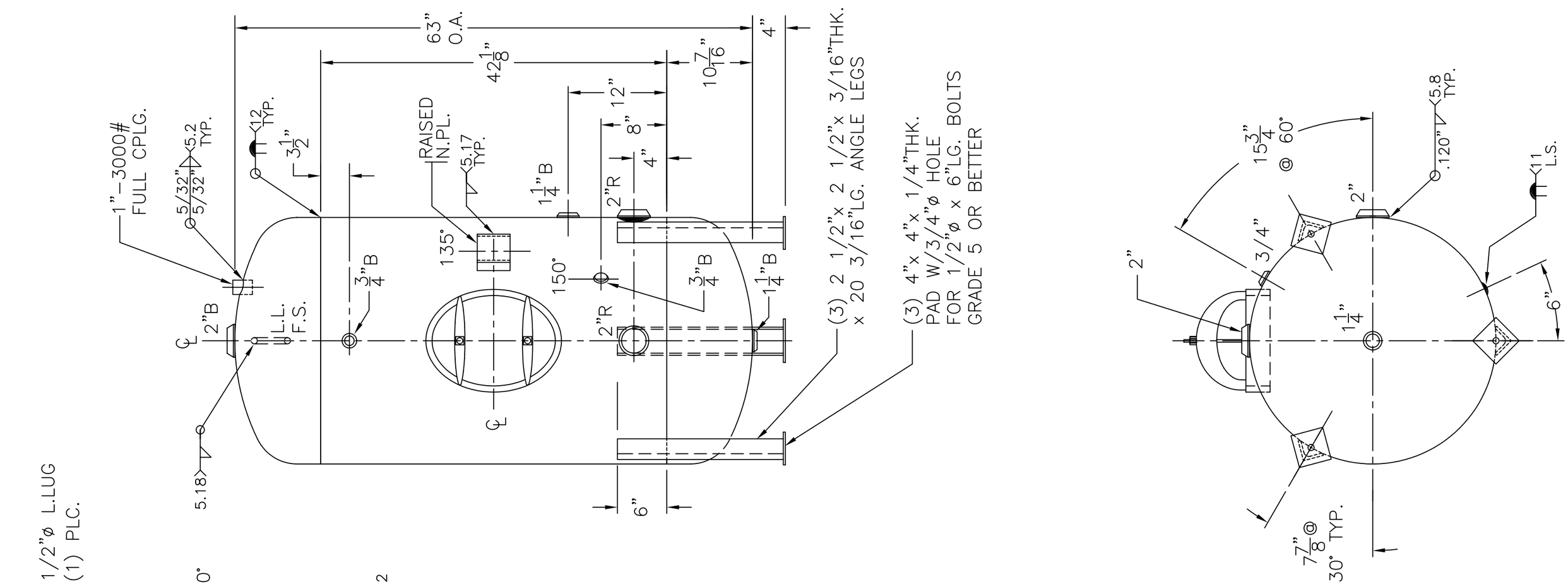

NOTE: 1) HYDRO @ 240 PSIG.
2) 4–1–04 PROOF TEST.

SHELL / HEADS	.166" SA–414–G 2:1 S.E.	ES–30–180–V	REV. 1–11–07
	JOGGLE		DATE: 8–31–89
		FOR: HANSON STANDARD	
		VERT. WATER TANK	
	.165" SA–414–G	SURFACE AREA = 44.4 SQ. FT.	
		INSIDE: EPOXY LINED	
M.A.W.P. 160 PSIG. @ 180 °F		OUTSIDE: PRIME	
		CAD "B" SIZE UNDER "STD"–SERIES	
ASME. SECTION IV 2004 ADD 2006		LEG ZONE: 4–15KM. DATE: 1–15–03	
X–RAY: RT–NO/H.L.W.		BY: J.G.	SCALE: 1" = 12"
GALLONS: 180	WT. 375 LBS.	ROY E. HANSON JR. MFG.	
SERIAL NO.		1600 E. WASHINGTON BLVD. LOS ANGELES, CA 90021	
N.B.			